L61 Series

RoHS Directive Products

High Flow Rate Applications

Inlet Pressure	Max.24 MPaG (Max.3,480 PSIG)
Outlet Pressure	Max.0.8 MPaG (Max.116 PSIG) (Pressure Range: 0~0.2 MPa, 0~0.4 MPa, 0~0.6 MPa, 0~0.8 MPa)
Supply Pressure Effect	0.0006 MPaG (0.087 PSIG) per 0.1 MPaG (14.5 PSIG)
Proof Pressure	31.5 MPa (4,567 PSI), 1.5 MPa (Outlet Side)
CV	0.07
Temperature	−10°C to +40°C
Outboard Leakage	1×10^{-11} Pa・m³/sec・He (1×10^{-10} atm・cc/sec・He)
Internal Volume	32.3 cc (1.97 in³) w/o fittings
Approximate weight	4.7 kg (10 lbs. 6 oz.)
Installation	Threaded holes on the rear surface or Panel mounting

[NOTE]
1MPa = 10.2 kgf/cm² = 145.04 PSI
1MPa = 7504.36 mmHg = 295.4 inHg

Cross sectional drawing

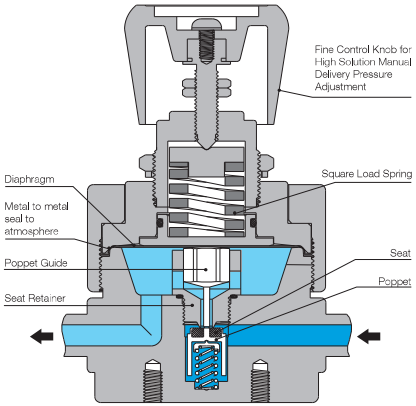

[NOTE]
- Avoid turning the control knob excessively.
- No filter in this unit.

Flow characteristics

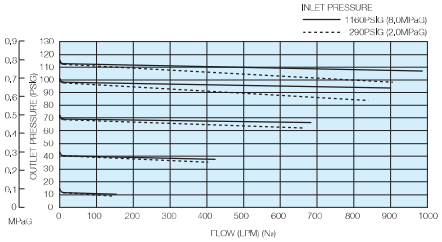

[NOTE]
- These tests were performed at ambient conditions.

Outline drawing

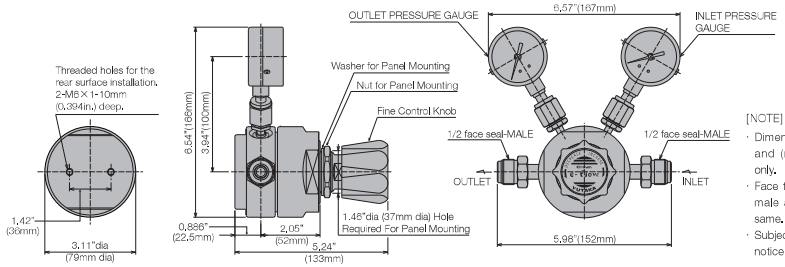

[NOTE]
- Dimensions are in inches and (mm) for reference only.
- Face to face length of the male and female are the same.
- Subject to change without notice.

Materials of construction

MODEL & TYPE	L61SS	L61SH	L61SS-CO
Wetted Parts			
Body	SUS316L		
Poppet	SUS316	Hastelloy® C-22	SUS316
Seat Retainer	SUS316L	Hastelloy® C-22	SUS316L
Diaphragm	Hastelloy® C-22		SUS316L
Seat	PCTFE		
Spring	SUS316		
Gasket to seal for gauge	Ni		SUS316
Non-wetted Parts			
Bonnet	SUS304		
Control Knob	ABS Resin		
O-ring	NBR		

Wetted surface finishes

Standard Ra (GRADE "B")	32μin. (0.80μm) or less
Optional Ra (GRADE "A")	7μin. (0.18μm) or less

Standard connections

1/4" face to face length of the male and female are the same. 4.96in. (126mm)
1/4" Tube stubs and other connections available as options.
3/8", 1/2" face to face length of the male and female are the same. 5.98in. (152mm)

[NOTE]
- Any combination of Face Seal male and/or female fittings are available for inlet and outlet.
- Size and configuration of pressure gauge port is 1/4" Face Seal male.
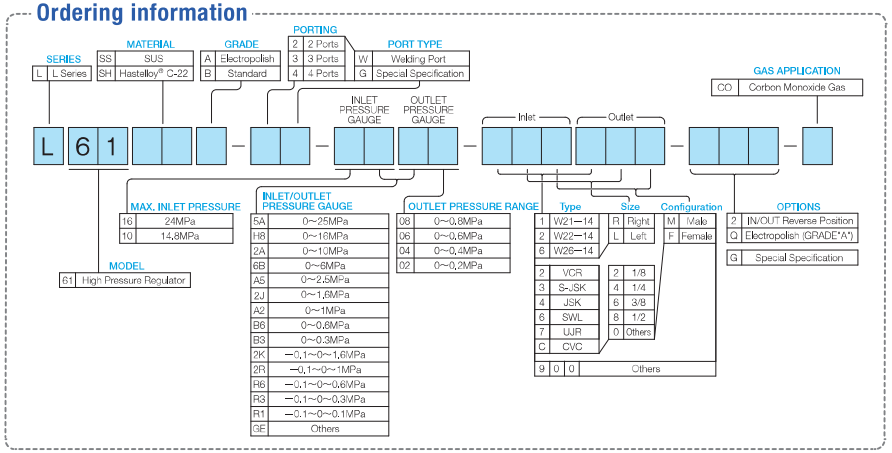
Ordering information